Rev.no:	Note:	Info	Initials
R1	Inch-dimensions added		IG

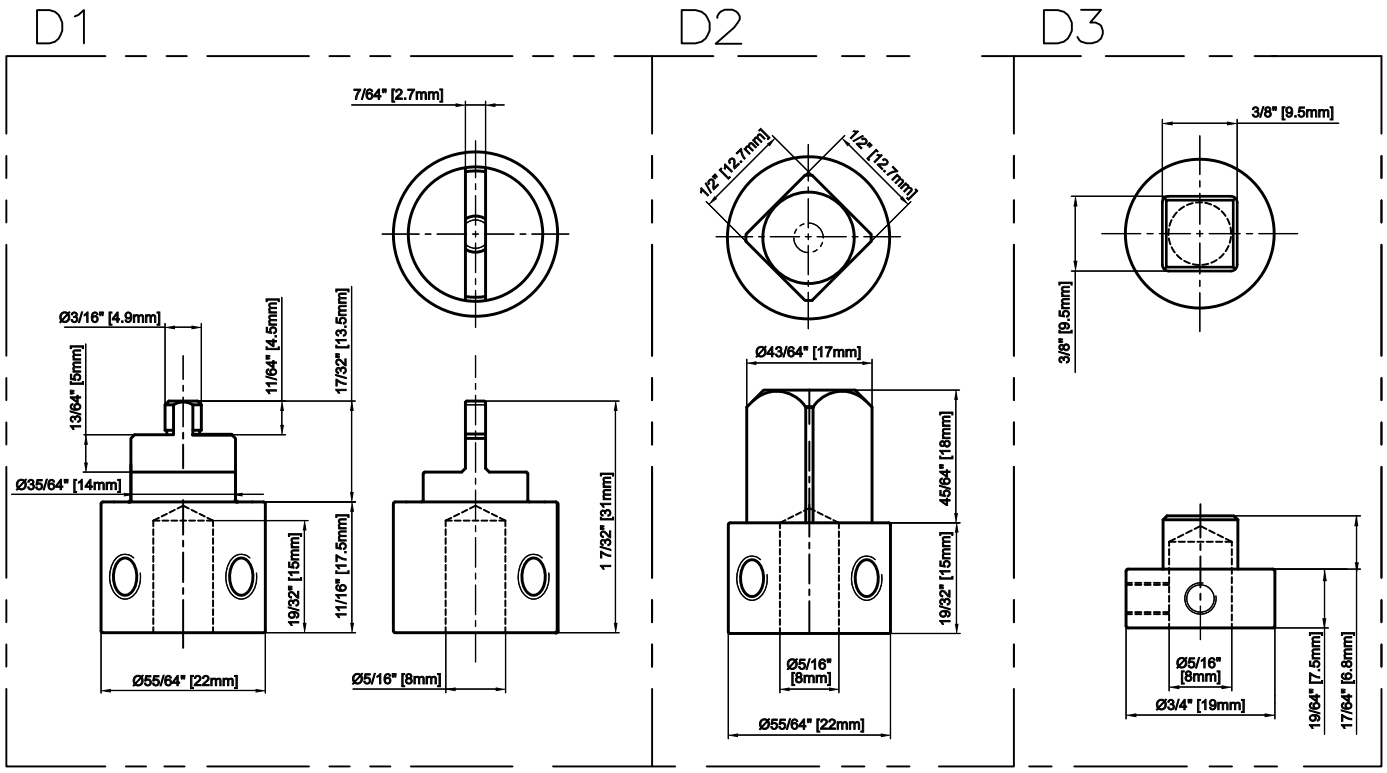

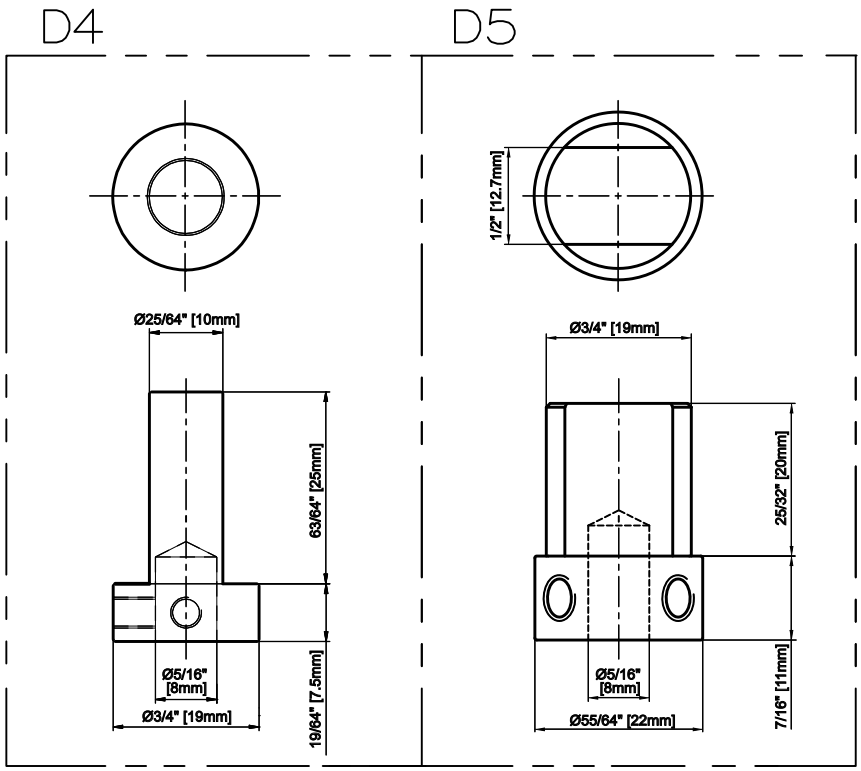

Designed: 10 08 18	Designer: Igor Gruda	Drawing scale: 1:1	Format: A4	Sheet: 1/1

Tracking no:	Rev. no:	Product no:	Title, Name or Description:	Rev.date: (ymd)
10214	R1	-	Spindle Chart - Digital	10 08 24

This drawing is the property of BLX Sweden AB, protected in accordance with prevailing law.