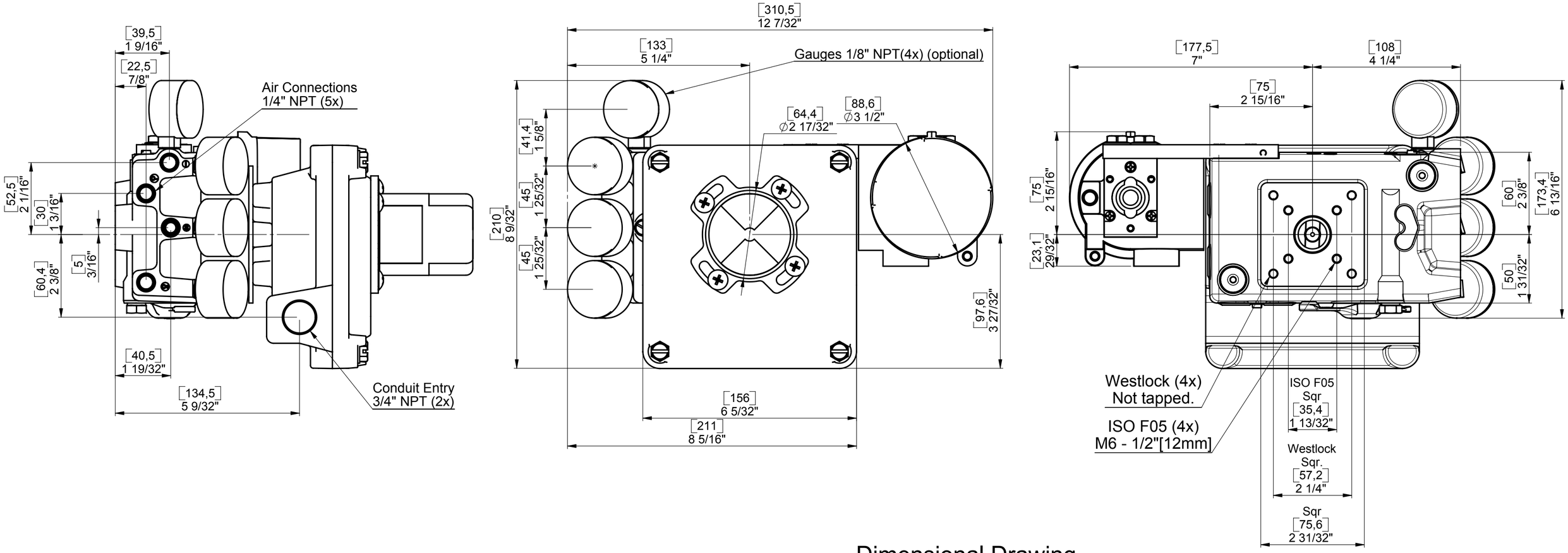

Dimensional Drawing
VAC Positioner V200
Westlock 2007 + Fairchild X17800P

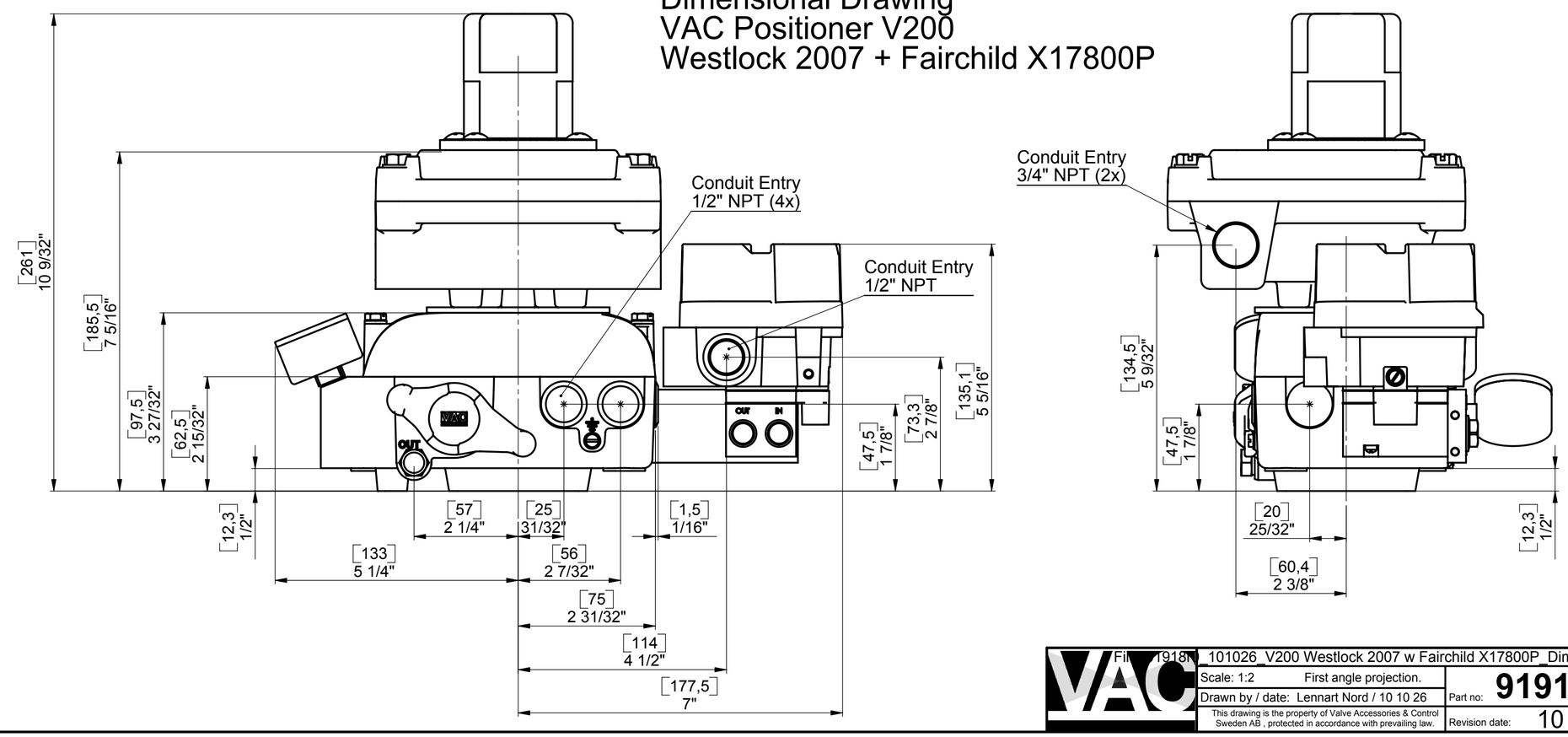

VAC	File: 91918N_101026_V200 Westlock 2007 w Fairchild X17800P_Dim Drawing	
	Scale: 1:2 First angle projection.	Part no: **91918 r0**
	Drawn by / date: Lennart Nord / 10 10 26	
	This drawing is the property of Valve Accessories & Control Sweden AB , protected in accordance with prevailing law.	Revision date: 10 10 26