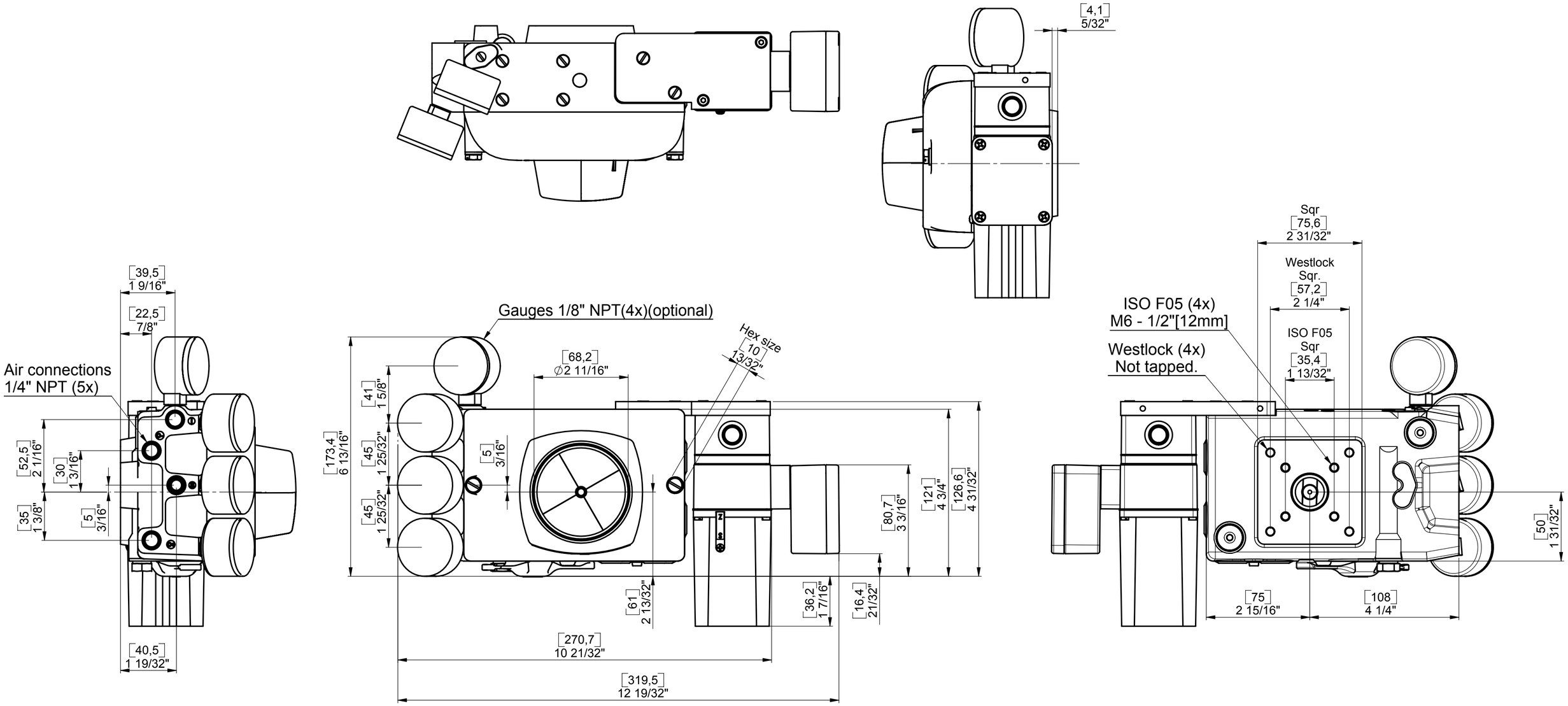

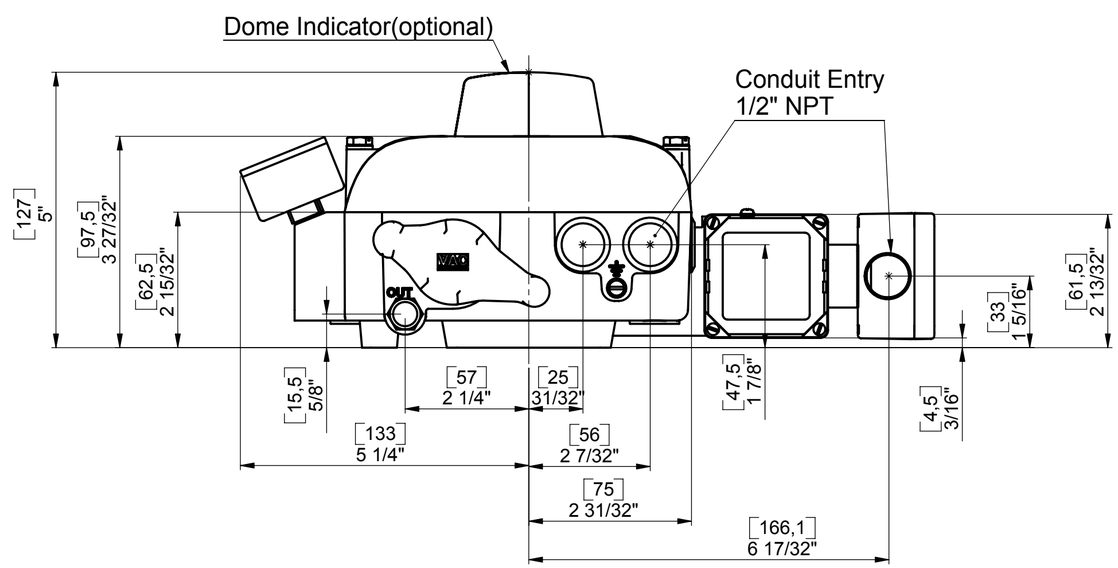

Dimensional Drawing
VAC Positioner V200 FF
IP-WatsonSmith 420 Fail Freeze

VAC	File: 91904r3_101026_V200 FF_WatsonSmith 420_Dim Drawing	
	Scale: 1:2 First angle projection.	Part no: **91904 r3**
	Drawn by / date: Lennart Nord / 05 08 03	
	This drawing is the property of Valve Accessories & Control Sweden AB , protected in accordance with prevailing law.	Revision date: 10 10 26