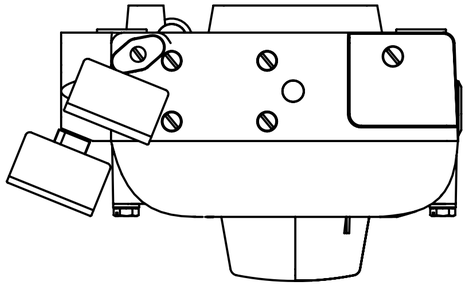

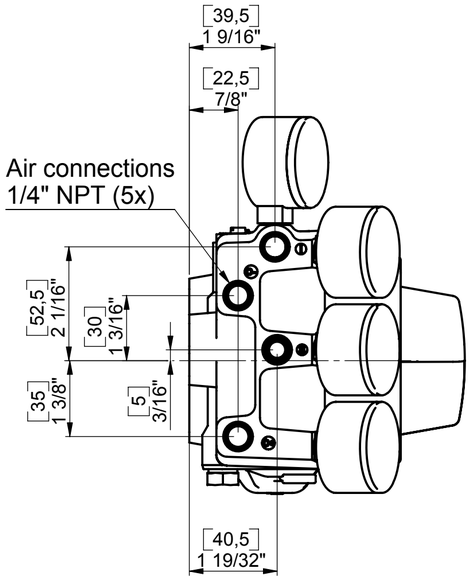

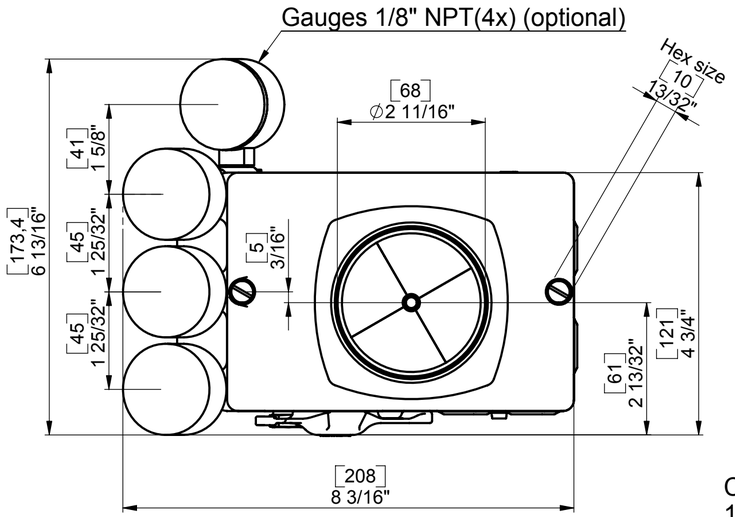

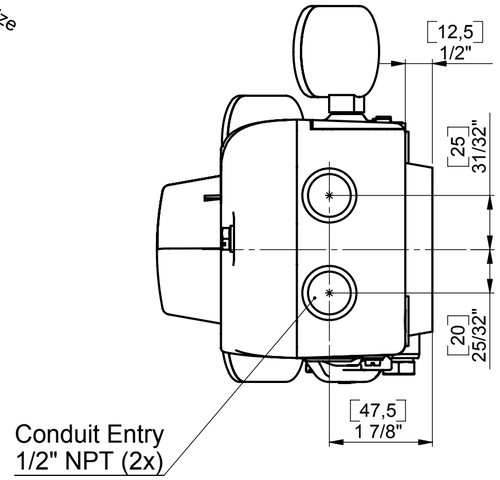

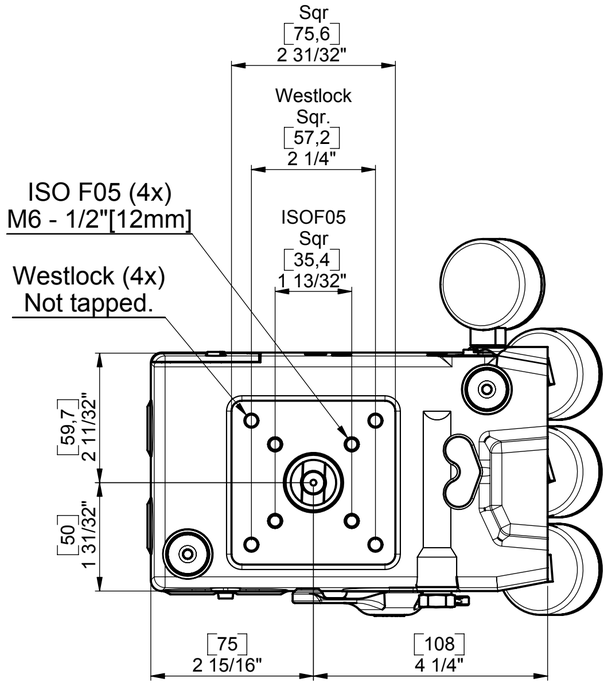

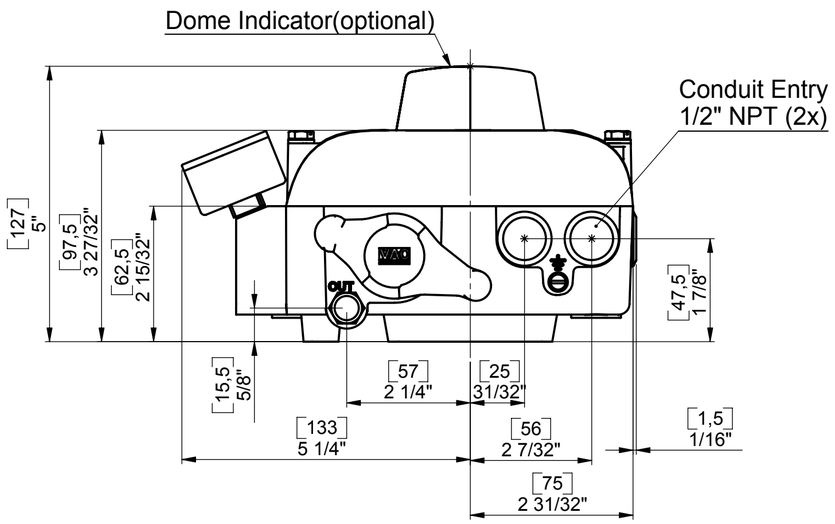

Dimensional Drawing
VAC Positioner V200 P and E

VAC	File: 91900r3_101026_V200 PP_EP STD_Dim Drawing	
	Scale: 1:2 First angle projection.	Part no: **91900 r3**
	Drawn by / date: Lennart Nord / 05 08 03	
	This drawing is the property of Valve Accessories & Control Sweden AB , protected in accordance with prevailing law.	Revision date: 10 10 26